GECO®

CURRENT TRANSFORMER

LIST OF CONTENTS

CURRENT TRANSFORMERS (BH-0.66)

- MODEL BH-0.66 SOLID TYPE G-1
- MODEL BH-0.66 20 I, MODEL BH-0.66 30 I G-2
- MODEL BH-0.66 30 I 0.2 CLASS, MODEL BH-0.66 40 I G-3
- MODEL BH-0.66 50 I, MODEL BH-0.66 60 I G-4
- MODEL BH-0.66 80 I, MODEL BH-0.66 100 I G-5
- MODEL BH-0.66 120 I G-6

SPLIT CORE CURRENT TRANSFORMERS DP SERIES

- TECHNICAL DATA G-7
- MODEL DP-23, MODEL DP-58, MODEL DP-88 G-8
- MODEL DP-812, MODEL DP 816 G-9

CURRENT TRANSFORMER (BH-0.66)

Technical Data:

- Secondary current Isn:5A
- Max. voltage rating Ue:660V]
- Safety factor (fs):10
- Degree of protection :IP20
- Operating temp. : -5°C to 40°C,humidity <80%
- Standards : IEC/EN 60044-1
- Installation type : mounting on plates or bars
- Class : 1

Model BH-0.66 SOLID TYPE

Model	Transformation Ratio (Ipn/Isn)	Burden VA Class 1	
BH-0.66 Solid Type	5	5	
	10/5	5	
	15/5	5	
	20/5	5	
	25/5	5	
	30/5	5	
	40/5	5	
	50/5	5	
	75/5	5	
	100/5	5	

Dimension see Fig.1

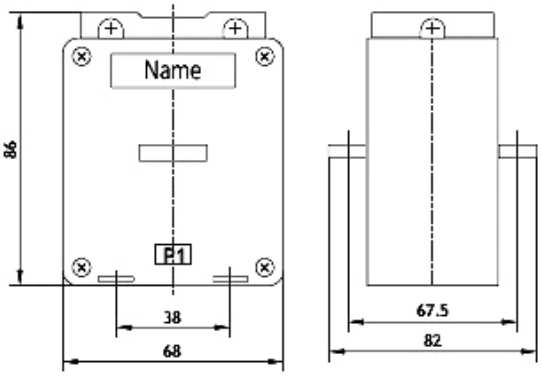

Fig 1

BH-0.66 20 I

Maximum cable size : ϕ 22 mm

Model	Transformation Ratio (Ipn/Isn)	Burden VA Class 1	
BH-0.66 20 I	75/5	2.5	
	100/5	2.5	

Dimension See Fig .2.

Model BH-0.66 30 I

Maximum bus bar size : 30 x 10 mm

Model	Transformation Ratio (Ipn/Isn)	Burden VA Class 1	
BH-0.66 30 I	30/5	2.5	
	50/5	2.5	
	75/5	2.5	
	100/5	5	
	150/5	2.5	
	200/5	5	
	250/5	5	
	300/5	5	
	400/5	5	

Dimension See Fig. 3

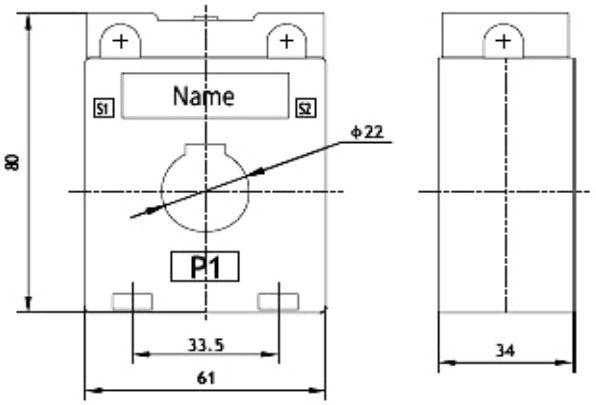

Fig 2

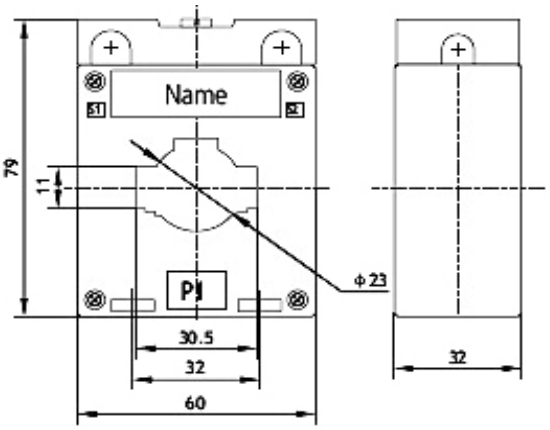

Fig 3

BH-0.66 30 I 0.2 class

Maximum bus bar size : 30 x 10 mm

Model	Transformation Ratio (Ipn/Isn)	Burden VA Class 1	
BH-0.66 30 I 0.2 class	75/5	2.5	
	100/5	2.5	

Dimension See Fig. 4

BH-0.66 40 I

Maximum bus bar size : 40 x 10 mm

Model	Transformation Ratio (Ipn/Isn)	Burden VA Class 1	
BH-0.66 40 I	30/5	2.5	
	50/5	2.5	
	75/5	2.5	
	100/5	5	
	150/5	2.5	
	200/5	5	
	250/5	5	
	300/5	5	
	400/5	5	
	500/5	10	
	600/5	10	
	750/5	10	
	800/5	10	

Dimension see Fig.5.

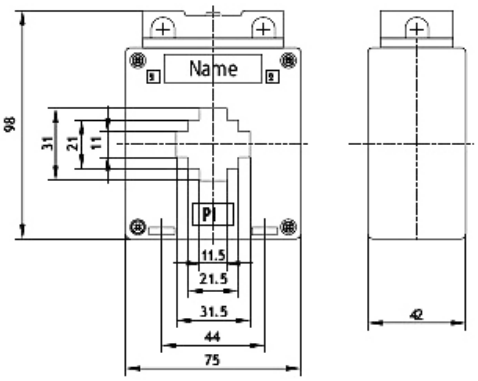

Fig 4

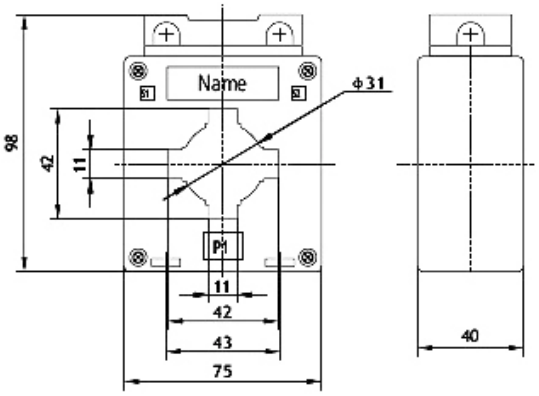

Fig 5

BH-0.66 50 I

Maximum bus bar size : 50 x 15 mm

Model	Transformation Ratio (Ipn/Isn)	Burden VA Class 1	
BH-0.66 50 I	200/5	2.5	
	250/5	5	
	300/5	5	
	400/5	5	
	500/5	10	
	600/5	10	
	750/5	10	
	800/5	10	
	1000/5	10	
	1200/5	20	
	1500/5	20	

Dimension see Fig.6.

BH-0.66 60 I

Maximum bus bar size : 60 x 20 mm

Model	Transformation Ratio (Ipn/Isn)	Burden VA Class 1	
BH-0.66 60 I	250/5	5	
	300/5	5	
	400/5	5	
	500/5	10	
	600/5	10	
	750/5	10	
	800/5	10	
	1000/5	10	
	1200/5	20	
	1500/5	20	
	2000/5	20	

Dimension see Fig.7.

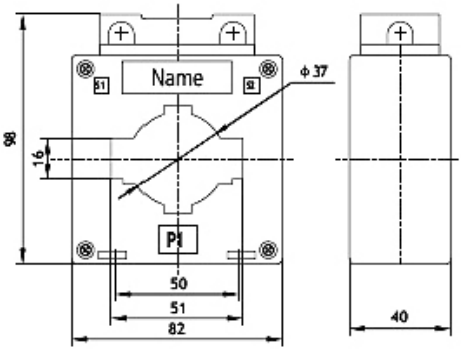

Fig 6

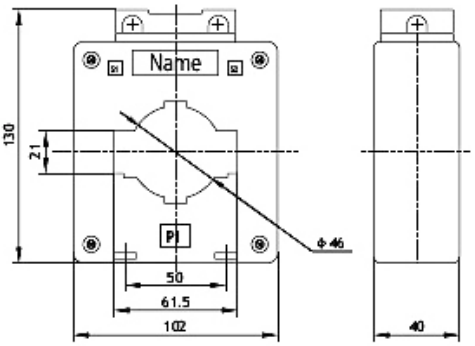

Fig 7

BH-0.66 80 I

Maximum bus bar size : 80 x 10 mm

Model	Transformation Ratio (Ipn/Isn)	Burden VA Class 1	
BH-0.66 80 I	300/5	5	
	400/5	5	
	500/5	10	
	600/5	10	
	750/5	10	
	800/5	10	
	1000/5	10	
	1200/5	20	
	1500/5	20	
	2000/5	20	
	2500/5	40	

Dimension see Fig.8.

BH-0.66 100 I

Maximum bus bar size : 100 x 20 mm

Model	Transformation Ratio (Ipn/Isn)	Burden VA Class 1	
BH-0.66 100 I	600/5	10	
	750/5	10	
	800/5	10	
	1000/5	10	
	1200/5	20	
	1500/5	20	
	2000/5	20	
	2500/5	40	
	3000/5	40	

Dimension see Fig.9.

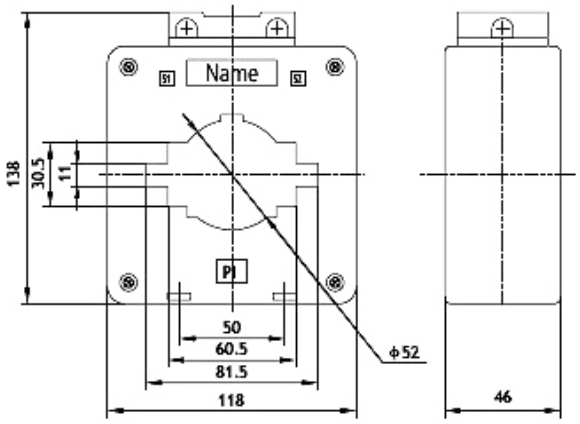

Fig 8

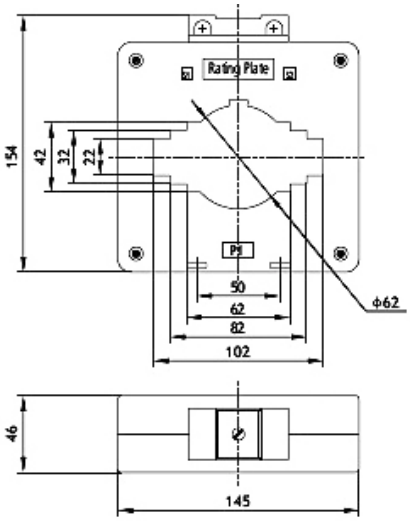

Fig 9

BH-0.66 120 I
Maximum bus bar size : 120 x 30 mm

Model	Transformation Ratio (Ipn/Isn)	Burden VA Class 1	
BH-0.66 120 I	1000/5	10	
	1200/5	20	
	1500/5	20	
	2000/5	20	
	2500/5	40	
	3000/5	40	
	4000/5	40	
	5000/5	40	

Dimension see Fig. 10.

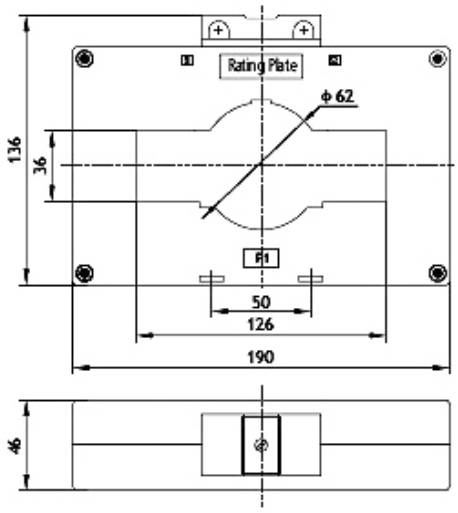

Fig 10

SPLIT CORE CURRENT TRANSFORMERS DP SERIES

The main Feature of DP transformers are:

- Small size and easy mounting
- Wide inner window allowing clamping of big cables or bus bars
- Wide range of sizes to accommodate all the existing installation.
- High accuracy and reliability.
- Simple and Robust operating mechanism
- Rotary handle with ON/OFF indication.
- Dual termination for bus bar as well as cable connection
- Advance Neutral

Technical Data :

- Primary current : 100A-5000A
- Secondary current : 5A,1A
- Standard approval : IEC44-1 , BS7626, VDE0414, VL94
- Maximum voltage : 0.72/3kV
- Frequency : 50/60 Hz
- Rated load : 1VA-30VA
- Class: 1
- Short-time thermal current : Ith=100*In
- Rated security coefficient : Fs<5

Model	A	B	C	D	E	F	G	H	I	Weight(kg)
DP-23	20	30	51	89	111	34	47	40	32	0.75
DP-58	50	80	78	114	145	32	32	32	33	0.9
DP-88	80	80	108	144	145	32	32	32	33	1.05
DP-812	80	120	108	144	185	32	32	32	33	1.25
DP-816	80	120	120	184	245	52	47	52	38	4.3

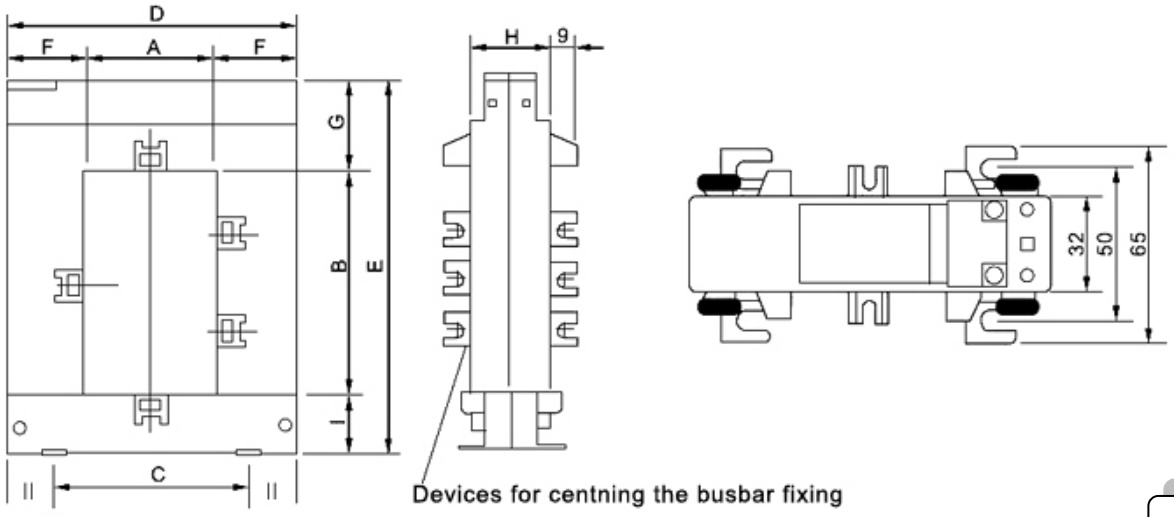

MODEL	Nominal current ratio	Burden VA Class 1	
DP-23	200/5	1.5	
	250/5	2	
	300/5	3.75	
	400/5	6	

MODEL	Nominal current ratio	Burden VA Class 1 VA	
DP-58	250/5	2	
	300/5	3	
	400/5	3	
	500/5	5	
	600/5	5	
	750/5	6	
	800/5	7.5	
	1000/5	10	

MODEL	Nominal current ratio	Burden VA Class 1
DP-88	250/5	3.75
	300/5	6
	400/5	10
	500/5	15
	600/5	17.5
	750/5	18
	800/5	18
	1000/5	20

MODEL	Nominal current ratio	Burden VA Class 1	
DP-812	500/5	12	
	600/5	15	
	750/5	17.5	
	800/5	18	
	1000/5	20	
	1200/5	25	
	1250/5	25	
	1500/5	30	

MODEL	Nominal current ratio	Burden VA Class 1	
DP-816	1000/5	20	
	1500/5	25	
	2000/5	25	
	2500/5	25	
	3000/5	30	
	4000/5	30	
	5000/5	30	